KAMAMI

KAmod USB HID Extender

Rev. 20250611060019
Źródło: https://wiki.kamamilabs.com/index.php?title=KAmod_USB_HID_Extender

Table of contents

Basic parameters 1
Standard equipment 3
Schematic 4
Indicator diodes 5
Power 6
Module role configuration 8
UART baud rate configuration 9
Operating mode configuration 10
IO1...4 inputs/outputs 11
Data transmission 12
Dimensions 13
Links 14

Description

KAmod USB HID Extender - USB HID device extender with CH9350 chip
The module is designed to transfer data between a computer and HID devices (mouse and keyboard) at a distance even many times greater than the standard length of USB cables. A pair of UART signals (RXD, TXD) is used for transmission, and to facilitate installation, the module is also equipped with a connector providing +5 V power from the board cooperating with the host (computer) to the module connected to the end devices.

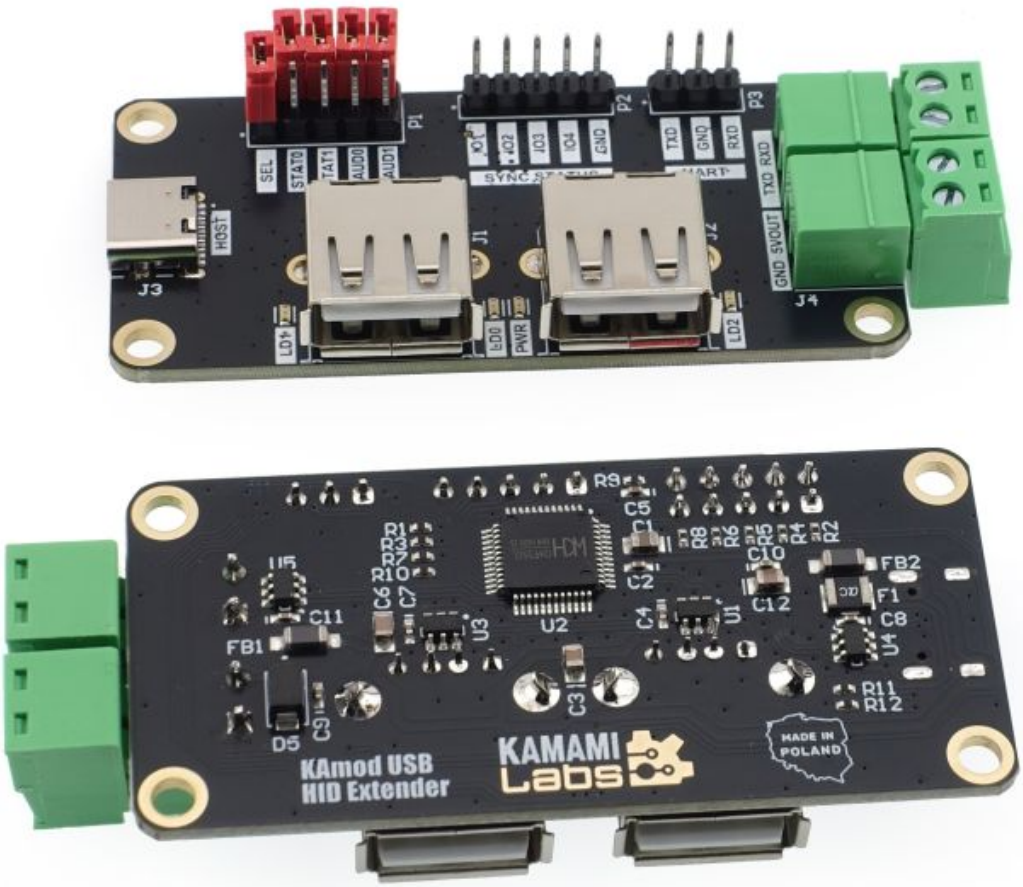

Basic parameters

- 1× USB-C socket - for connecting to a host, e.g. a computer *
- 2× USB type A socket - for connecting to a mouse and keyboard *
- 2× 3.81 mm screw connectors (detachable) - for transferring data via UART and supplying voltage between modules
- 1×5 goldpin connector (status outputs)
- 1×3 goldpin connector providing UART interface and ground (GND) connections
- Power supply: 5 V DC from the USB C port on the host side
- 2×5 goldpin strip for adding configuration jumpers
- 4 LEDs indicating the presence of supply voltage and the operating status of the modules
- Built-in ESD protection on all USB ports, UART connector (J5) and power connector (J4)
- Supports Windows, Linux, MAC and other operating systems with built-in HID device drivers
- The maximum length of cables connecting modules is approx. 20 m, but depends on the quality of the cables and the conditions in which the modules operate
- PCB dimensions: 65.2 × 30.8 mm
- Mounting holes: diameter 3.2 mm, spacing: 59 × 25 mm

*** NOTE:**

USB-C and USB A connectors cannot be used simultaneously on the same module!
Before connecting, please read the rest of this documentation.

Standard equipment

Code	Description
KAmod USB HID Extender	• Assembled and started module (2 pcs.) • Configuration jumpers (2 × 5 pcs.)

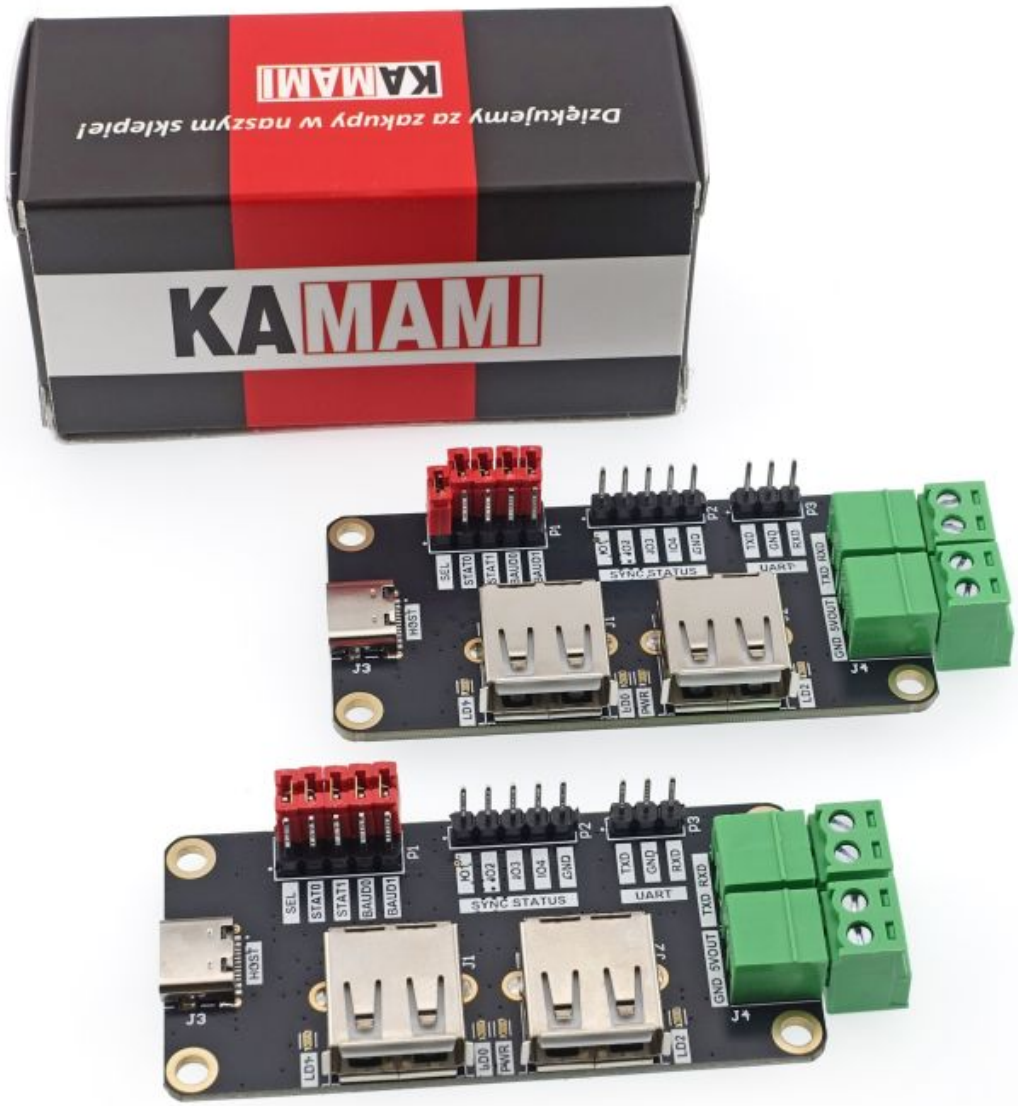

Schematic

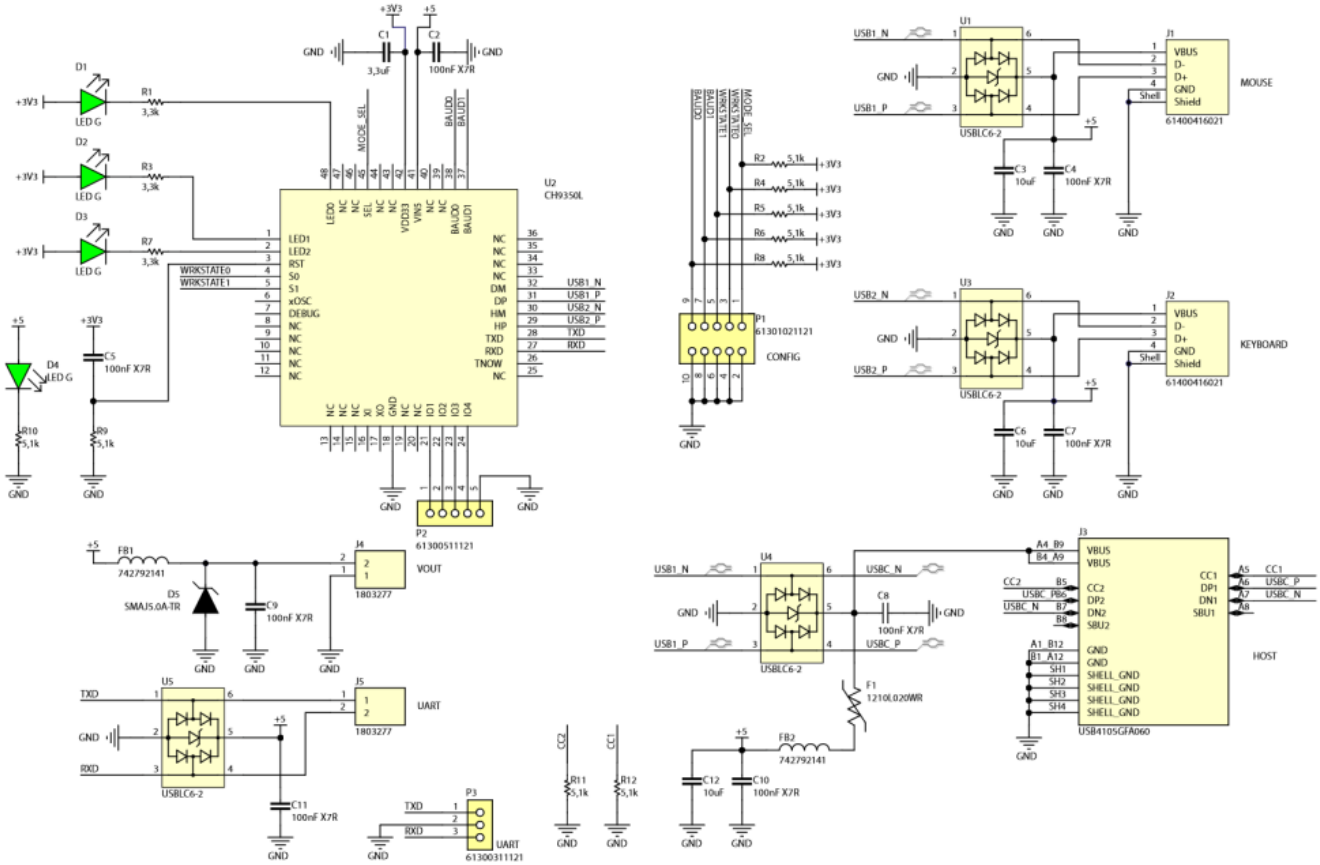
U2
CH9350L
U1
USBLC6-2
J1
VBUS
D-
D+
GND
Shield
MOUSE
61400416021
U3
USBLC6-2
J2
VBUS
D-
D+
GND
Shield
KEYBOARD
61400416021
P1
61301021121
CONFIG
P2
61300511121
J4
1803277
VOUT
U4
USBLC6-2
J3
VBUS
VBUS
CC2
DP2
DN2
SBU2
GND
GND
SHELL_GND
SHELL_GND
SHELL_GND
SHELL_GND
USB4105GFA060
HOST
U5
USBLC6-2
J5
1803277
UART
P3
UART
61300311121
F1
1210L020WR
FB1
742792141
FB2
742792141
D5
SMAJ5.0A-TR
D1
D2
D3
D4
LED G
R1
R3
R7
R10
R9
R11
R12
R2
R4
R5
R6
R8
C1
C2
C3
C4
C5
C6
C7
C8
C9
C10
C11
C12
3,3uF
100nF X7R
10uF
5,1k
3,3k
+3V3
+5
GND
MODE_SEL
BAUD0
BAUD1
WRKSTATE0
WRKSTATE1
USB1_N
USB1_P
USB2_N
USB2_P
USBC_N
USBC_P
TXD
RXD
CC1
CC2

Indicator diodes

The module is equipped with 4 LEDs that indicate the presence of the supply voltage and the status of individual USB ports.

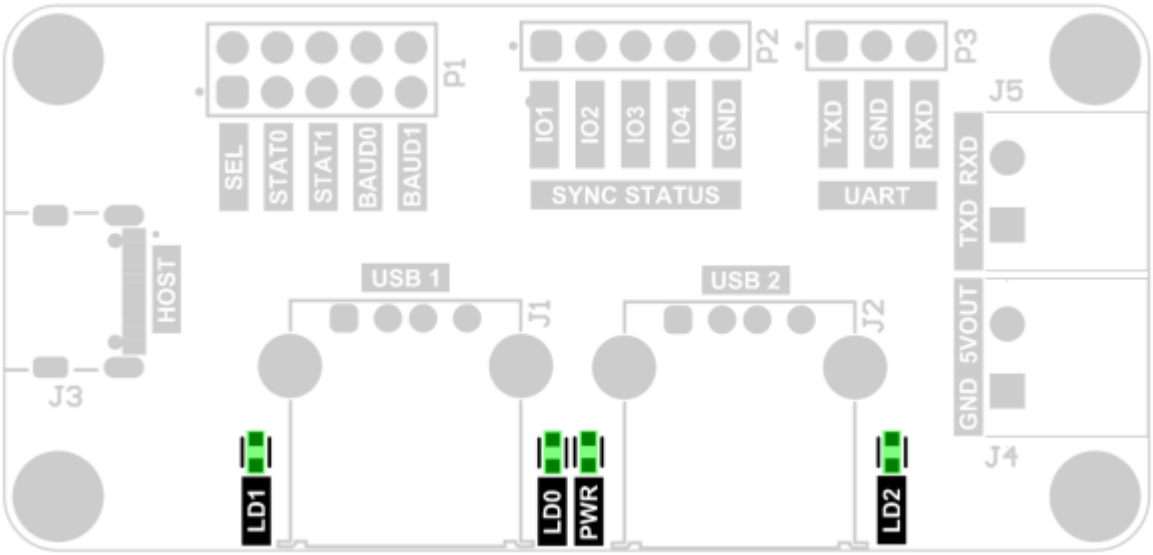

- LD0 – lights up immediately after connecting the HOST module to the master device (e.g. computer) and goes out after establishing communication with the computer.
- LD1 – lights up in the DEVICE module after connecting the HID device to USB port 1; blinks during communication with the HOST module; in the HOST module, lights up after connecting the HID device to any of the USB 1 or USB 2 ports and blinks during activity of channel 1.
- LD2 – lights up in the DEVICE module after connecting the HID device to USB port 2; blinks during communication with the HOST module; in the HOST module, it lights up when a HID device is connected to any of the USB 1 or USB 2 ports and flashes when channel 2 is active.
- PWR – power supply voltage indicator.

Power

The **HOST** module's power supply is provided by a USB C cable connected to the host device (e.g. computer).
For the **DEVICE** module, there are two methods of power supply.

1. Power supplied by voltage supplied to the J4 connector (GND / 5VOUT) from the appropriate pins of the **HOST** module's J4 connector. This method is the simplest in application, requiring only the connection of both modules with a 4-wire cable in the following arrangement:

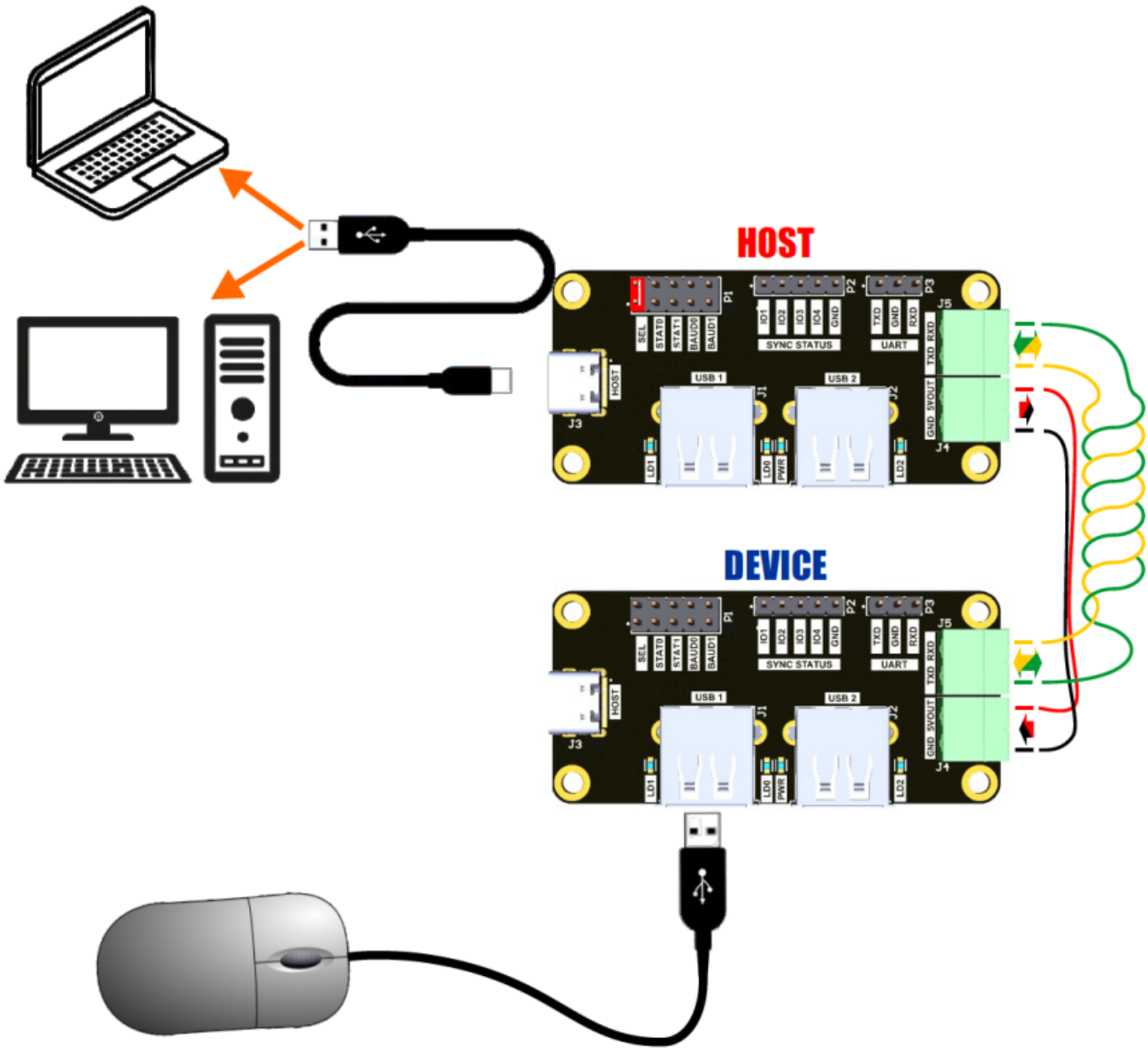

2. Power supplied by external voltage supplied to the J4 connector (GND / 5VOUT) of the **DEVICE** module. The preferred method for long-distance communication, as increased resistance of the power supply cables can lead to interference on the **DEVICE** module's power supply line. The connections between the **HOST** and **DEVICE** modules should be made as follows:

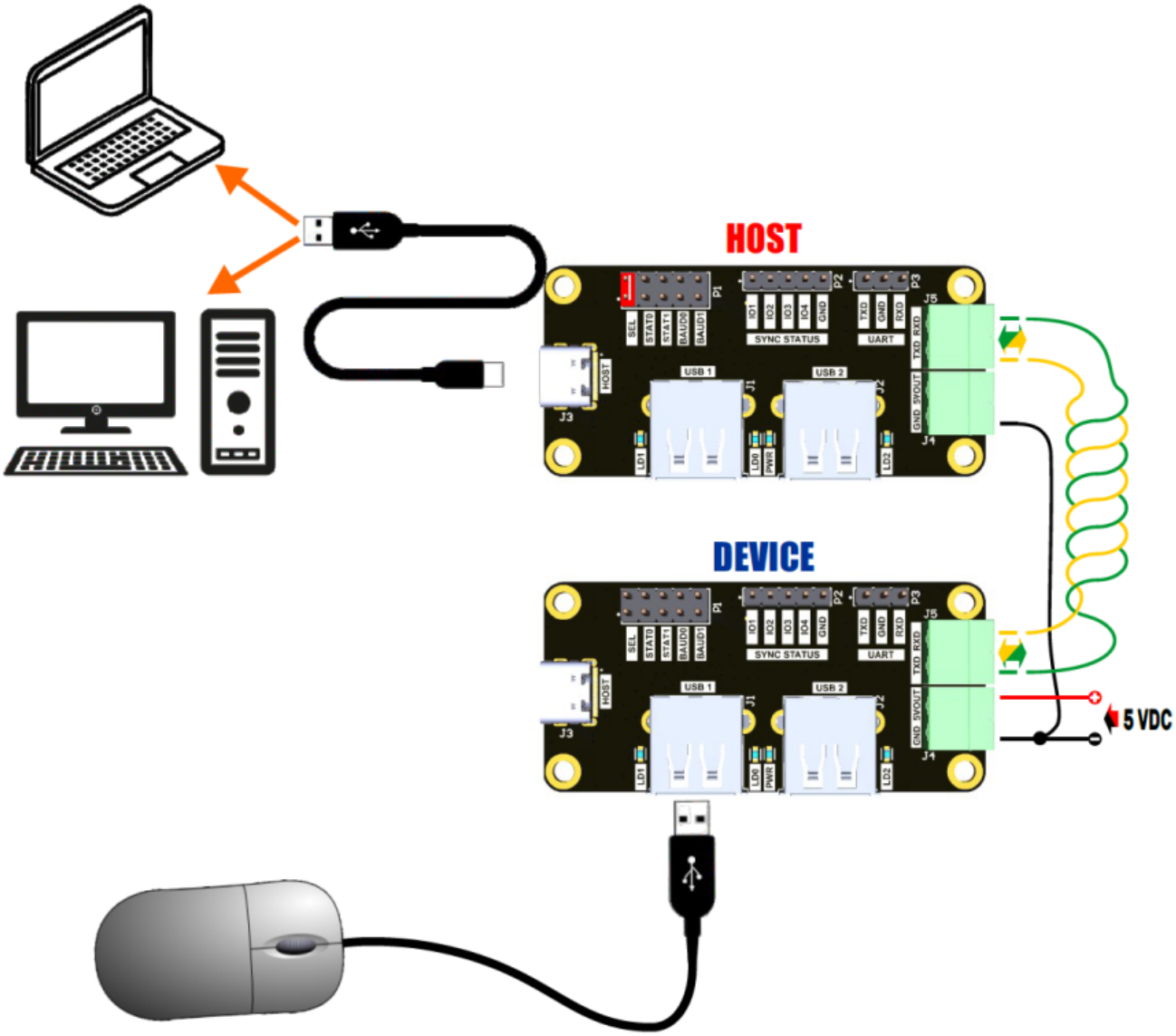

Note! When using the second configuration described, avoid a potential difference between the ground of the master device (on the **HOST** module side) and the ground of the power supply supplying 5 V to the **DEVICE** module. It is recommended to use a voltage source isolated from the power grid (or other infrastructure common to both modules), otherwise the equalizing currents in the ground loop may damage the module(s), the master device, the end device and/or the power supply.

Module role configuration

To configure the module role (**HOST** or **DEVICE**), set the **SEL** jumper in connector P1 as follows:

- Jumper **SEL** on - **HOST** module operating mode
- Jumper **SEL** off - **DEVICE** module operating mode

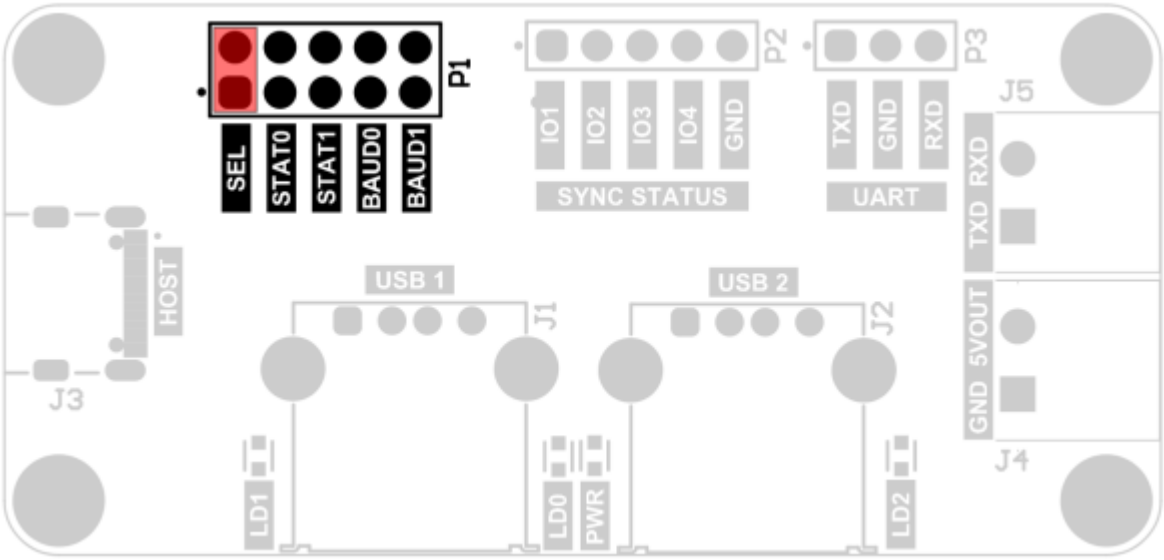

UART baud rate configuration

To configure the baud rate on the TXD/RXD line side, set the BAUD0 and BAUD1 jumpers in connector P1 as follows:

Transmission speed [bps]	115200	57600	38400	300000
BAUD0	□	□	□	□
BAUD1	□	□	□	□

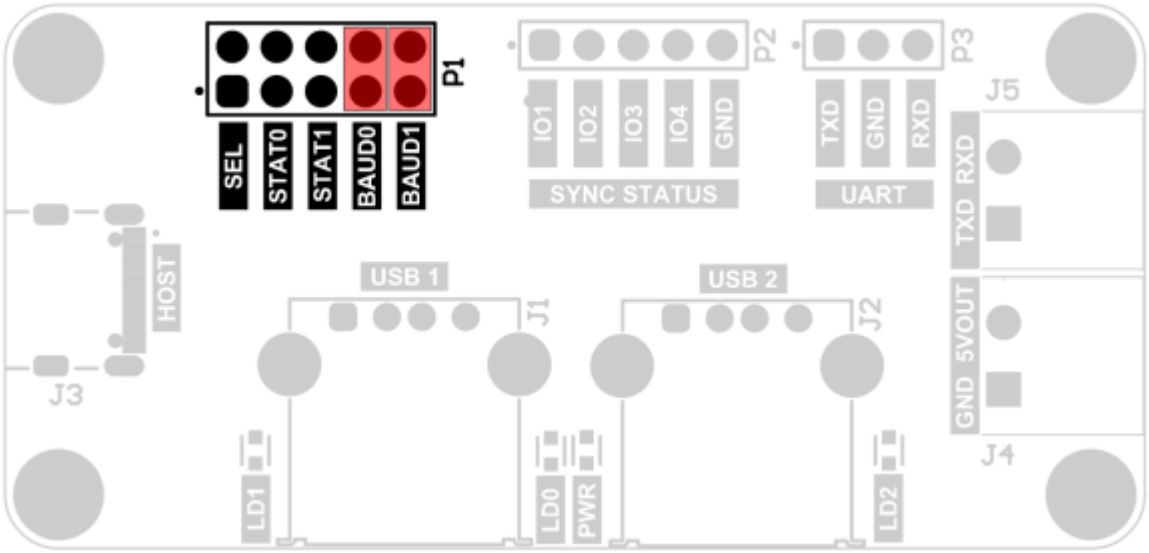

Operating mode configuration

The CH9350 chip used in the module can operate in one of five modes, selected using the STAT0 and STAT1 jumpers in the P1 connector as follows:

Operating Mode	0/1	2	3	4	
STAT0	□	□	□	□	
STAT1	□	□	□	□	□

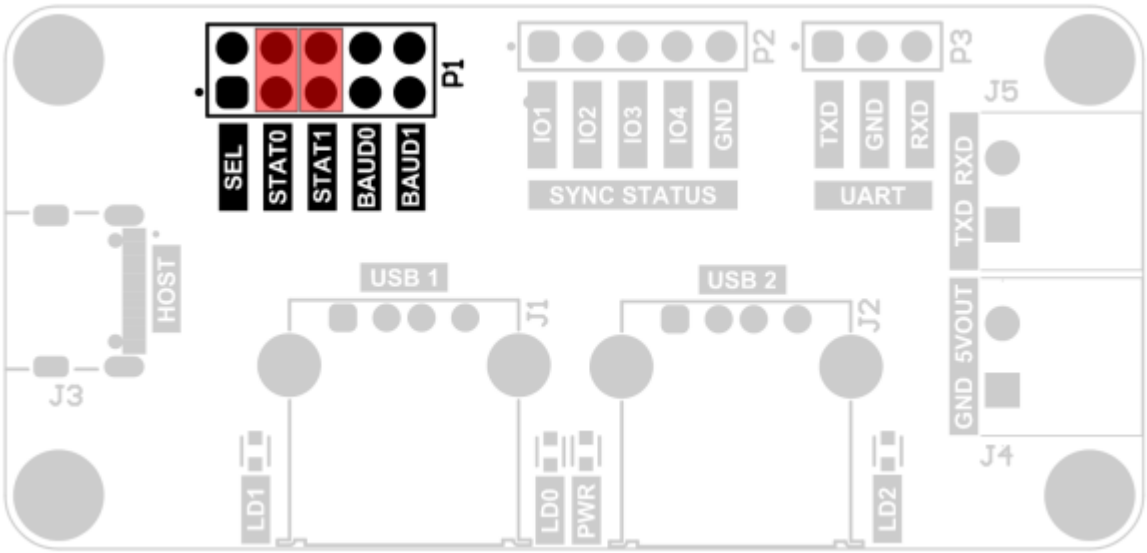

- Mode 0 – automatically switched on after supply voltage is applied; the system simulates the operation of a composite HID device.
- Mode 1 – the device simulated by the system depends on the HID controller connected to the **DEVICE** module (keyboard and/or mouse); this mode also supports the operation of other HID devices (e.g. multimedia),
- Mode 2 – the system simulates the operation of a composite HID device, with the possibility of modifying the VID and PID values,
- Mode 3 – as in mode 2 with the difference that the system simulates the operation of an ABS (absolute displacement mouse),
- Mode 4 – as in mode 2; the system also supports HID digitizers.

More details about the operating modes can be found in the CH9350 system documentation.

IO1...4 inputs/outputs

The CH9350 provides four input/output lines marked IO1, IO2, IO3 and IO4. In the KAmod USB HID Extender module, they are brought out to the P2 pin connector.

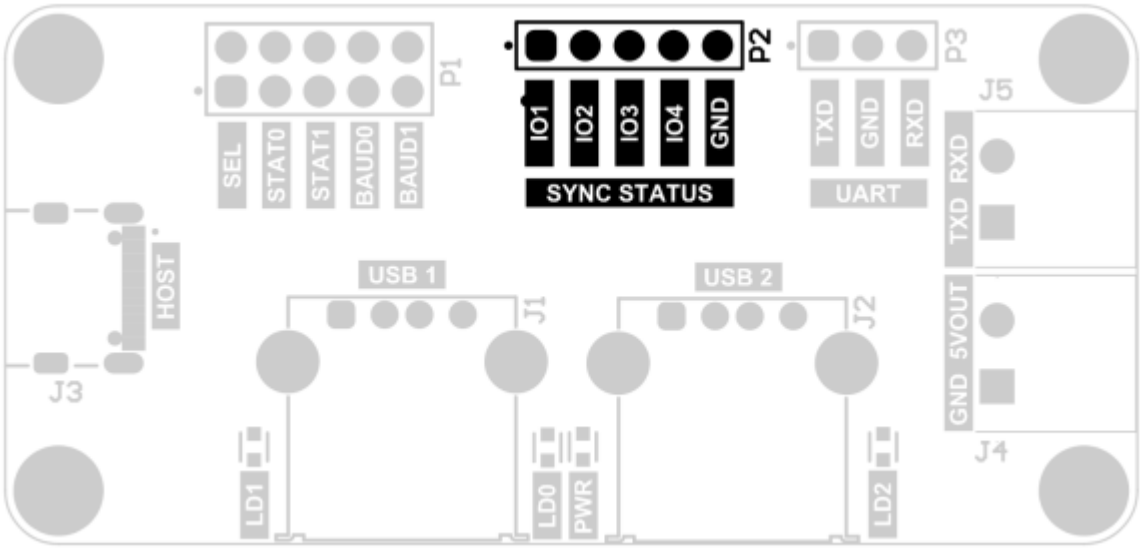

In the module operating in **HOST** mode:

- IO1/IO2 – outputs with a state corresponding to the IO1/IO2 inputs of the **DEVICE** module,
- IO3/IO4 – inputs whose state is “rewritten” to the IO3/IO4 outputs of the **DEVICE** module.

In the module operating in **DEVICE** mode:

- IO1/IO2 – inputs whose state is “rewritten” to IO1/IO2 outputs in the **HOST** module,
- IO3/IO4 – outputs with a state corresponding to IO3/IO4 inputs of the **HOST** module.

Data transmission

A sample waveform on the UART interface data line (at a speed of 115200 bps), recorded after connecting the wireless mouse receiver to the **DEVICE** module and connecting both modules with a 5-meter multi-core unshielded cable, is shown in the figure below.
A detailed description of the communication protocol can be found in the CH9350 system documentation.

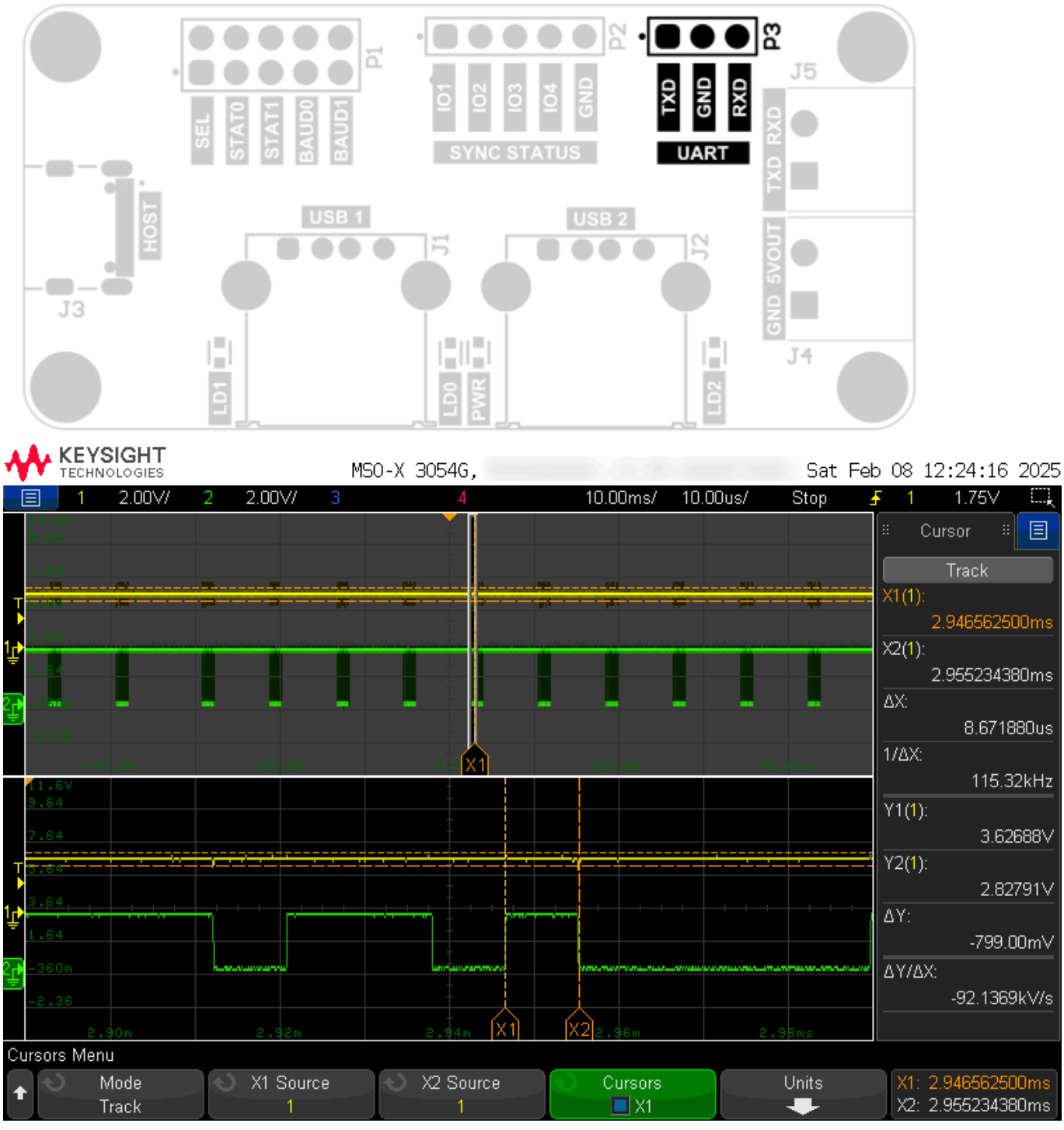

Dimensions

The dimensions of the KAmod USB HID Extender board are 30.8 × 65.2 mm. There are 4 mounting holes on the board with a diameter of 3.2 mm and a spacing of 25 × 59 mm.

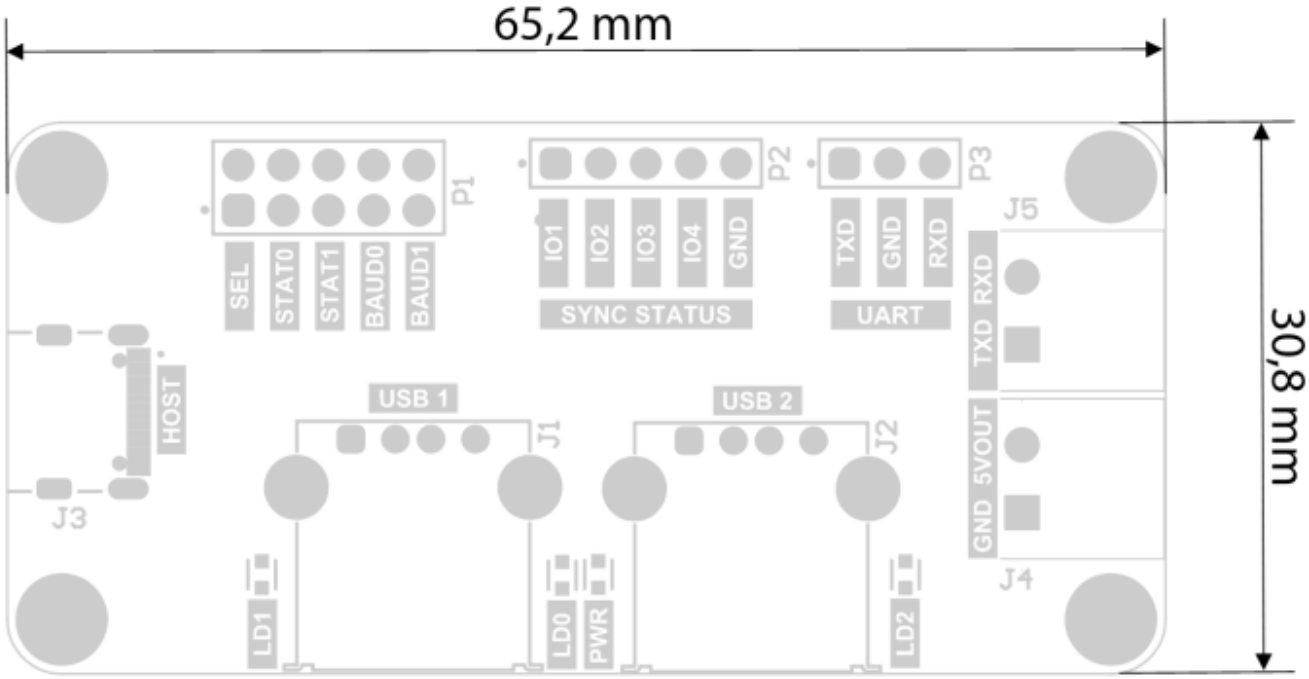

Links

- CH9350 datasheet

BTC Korporacja
05-120 Legionowo
ul. Lwowska 5
tel.: (22) 767-36-20
faks: (22) 767-36-33
e-mail:
sprzedaz@kamami.pl
https://kamami.pl

Zastrzegamy prawo do wprowadzania zmian bez uprzedzenia.
Oferowane przez nas płytki drukowane mogą się różnić od prezentowanej w dokumentacji, przy czym zmianom nie ulegają jej właściwości użytkowe.
BTC Korporacja gwarantuje zgodność produktu ze specyfikacją.
BTC Korporacja nie ponosi odpowiedzialności za jakiekolwiek szkody powstałe bezpośrednio lub pośrednio w wyniku użycia lub nieprawidłowego działania produktu.
BTC Korporacja zastrzega sobie prawo do modyfikacji niniejszej dokumentacji bez uprzedzenia.